Oct. 30, 1945. J. F. KIENNINGER 2,387,914

IMBIBITION PRINTING

Filed Feb. 17, 1944

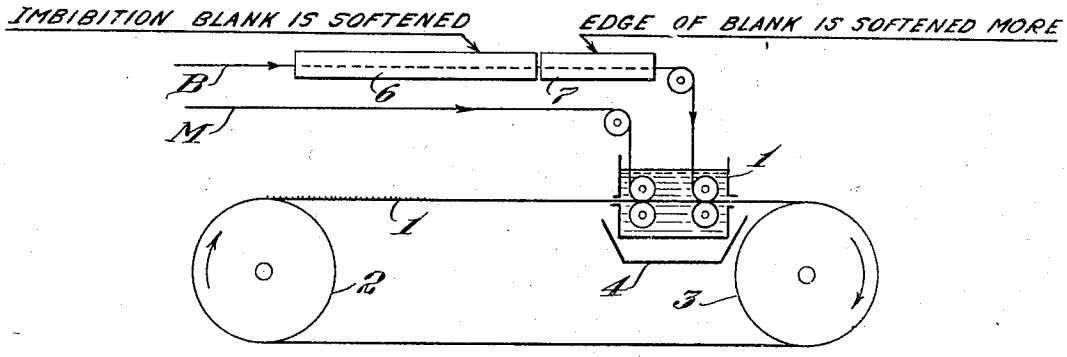


Fig. 1

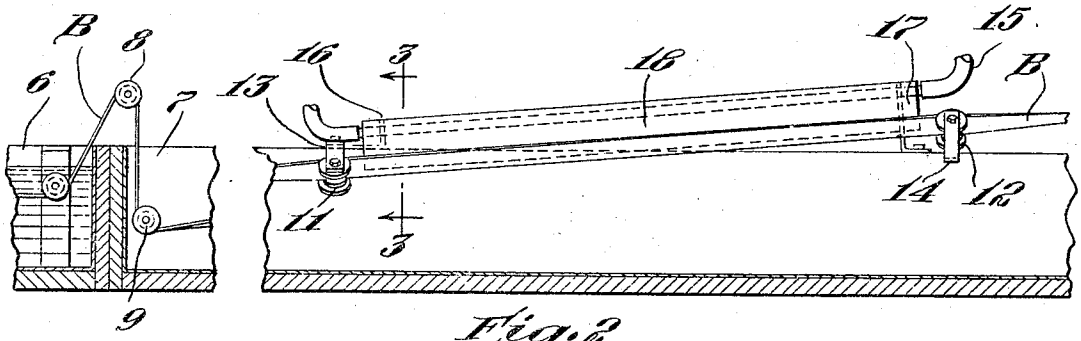


Fig. 2

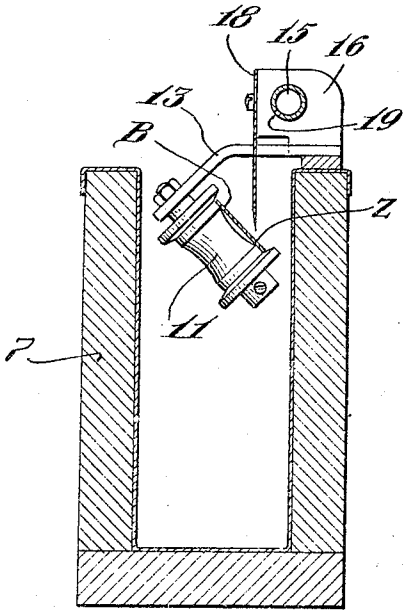


Fig. 3

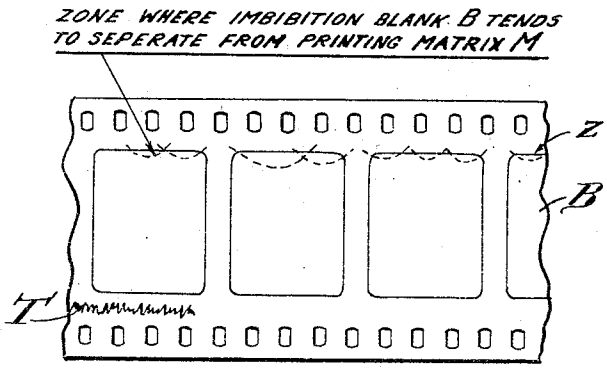


Fig. 4

Inventor
John F. Kienninger
by Roberts, Cushman & Grover
Att'ys.

Patented Oct. 30, 1945 2,387,914

# UNITED STATES PATENT OFFICE

2,387,914

## IMBIBITION PRINTING

John F. Kienninger, Los Angeles, Calif., assignor to Technicolor Motion Picture Corporation, Hollywood, Calif., a corporation of Maine

Application February 17, 1944, Serial No. 522,721

5 Claims. (Cl. 101—149.1)

In printing motion pictures by imbibition, from a dye impregnated matrix to a dye absorptive blank, it is customary to employ a relief matrix in which the gelatin coating is thicker in the shadows than in the highlights and a blank comprising a layer of gelatin or other dye absorptive material. In order to obtain good definition in the picture printed on the blank it is necessary to employ relatively hard gelatin and in order to maintain intimate contact between the matrix and blank while the dye is being imbibed by the blank from the matrix, it is desirable to soften the gelatin on the blank temporarily. This is usually accomplished by passing the blank through a water bath in transit to the matrix in order to cause the gelatin on the blank to swell somewhat before it comes into contact with the matrix. If the gelatin be softened too much it mitigates against good definition in the transfer operation, and if the gelatin be softened too little it results in edge trouble. The degree of softening for optimum definition is somewhat above the point where edge trouble begins. Heretofore it has been necessary to tolerate imperfect definition or encounter some edge trouble, and as a practical matter it has been customary to compromise between the two evils.

The aforesaid edge trouble results from the fact that the valleys of the relief matrix do not make good contact with the blank along the edge of the picture during the transfer process, as they would if the blank were swollen with water to a greater degree. This lack of intimate contact interferes with the transfer of dye, resulting in imperfect printing along the margin of the picture. Ordinarily this edge trouble is confined to a narrow zone just inside the sprocket holes. In the case of film having a sound-track inside one row of sprocket holes the edge trouble is usually confined to the edges of the pictures along the other row of sprocket holes; on the sound-track side the edges of the pictures are too remote from the sprocket holes to be subject to the trouble.

For the purpose of illustration a typical embodiment of the invention is shown in the accompanying drawing in which:

Fig. 1 is a diagrammatic view;

Fig. 2 is a longitudinal section through the apparatus for softening the edge of the blank;

Fig. 3 is a section on line 3—3 of Fig. 2; and

Fig. 4 is a face view of a film showing the location where the aforesaid edge trouble takes place.

The particular embodiment of the invention chosen for the purpose of illustration comprises a transfer machine of the type having a belt in the form of a metal ribbon 1 trained over two drums 2 and 3 to travel in an orbital path, the belt having register pins along its margins to fit into the sprocket holes of the blank and matrix. As shown in Fig. 1 the blank B and matrix M are fed into superposed contact on the belt within a tank 1 which is filled with water. By bringing the films together under water there is less danger of trapping air bubbles between the two films. The belt enters and leaves the tank 1 through restricted openings. The water leaking through these openings is caught in a pan 4 and fresh water is continuously fed into the tank. In transit to the tank 1 the blank passes through a water tank 6 in which the gelatin is softened to the proper degree for good definition throughout the entire area of the blank. Thence the blank passes to the device 7 where the gelatin along the margin of the film is softened somewhat more. As illustrated in Fig. 4 this additional softening is needed in the zone Z at the edges of the picture areas along the margin of the film opposite to that carrying the sound-track T.

Suitable apparatus for effecting this additional softening along the margin of the film is shown in Figs. 2 and 3. The blank B passes from tank 6 to tank 7 over a roller 8, thence under roller 9 in the tank 7 and thence over inclined rollers 11 and 12 mounted on the side of the tank by means of brackets 13 and 14. Intermediate the two rollers 11 and 12 the lower margin of the film is bathed with a thin stream of warm water applied through the pipe 15 which is mounted on the side of the tank 7 by means of brackets 16 and 17. These brackets also carry a plate 18 whose lower edge is directed toward the aforesaid zone Z. The pipe 15 has a row of perforations 19 directed toward the plate 18 and the water issuing through these perforations flows downwardly along the side of the plate 18 in the form of a thin sheet which gently bathes the margin of the blank.

From the foregoing it will be evident that according to the present invention the gelatin on the blank may be hardened in the process of manufacture as much as is necessary for optimum definition and then, by differentially softening the picture area and the margin of the film, most of the picture area need be softened no more than is necessary for optimum definition and good contact between the matrix and blank is obtained along the edge of the picture area where the aforesaid edge trouble ordinarily takes place. While this additional softening along the edge of the picture reduces the quality

of definition to some extent, this is of no consequence along the extreme edges of the pictures.

It should be understood that the present disclosure is for the purpose of illustration only and that this invention includes all modifications and equivalents which fall within the scope of the appended claims.

I claim:

1. The method of printing by imbibition from a dyed matrix to a blank having a dye absorptive layer which comprises softening said layer a predetermined amount throughout the picture layer to make it more dye absorptive, softening the layer a greater amount along the margin to maintain good contact between blank and matrix during the imbibition printing, and then pressing the blank and matrix together face to face to transfer the dye by imbibition from the matrix to the blank.

2. The method of printing by imbibition from a dyed matrix to a blank having a dye absorptive layer which comprises softening said layer a predetermined amount throughout the picture layer to make it more dye absorptive, heating the margin of the blank to soften the layer a greater amount along the margin, thereby to maintain good contact between blank and matrix during the imbibition printing, and then pressing the blank and matrix together face to face to transfer the dye by imbibition from the matrix to the blank.

3. The method of printing by imbibition from a dyed matrix to a blank having a dye absorptive layer which comprises softening said layer a predetermined amount throughout the picture layer to make it more dye absorptive, applying heated fluid to the margin of the blank to soften the layer a greater amount along the margin, and then pressing the blank and matrix together face to face to transfer the dye by imbibition from the matrix to the blank.

4. The method of printing by imbibition from a dyed matrix to a blank having a dye absorptive layer which comprises softening said layer a predetermined amount throughout the picture layer to make it more dye absorptive, applying hot water to the margin of the blank to soften the layer a greater amount along the margin, and then pressing the blank and matrix together face to face to transfer the dye by imbibition from the matrix to the blank.

5. The method of printing by imbibition from a dyed matrix to a blank having a dye absorptive layer which comprises feeding the blank through a bath to soften said layer a predetermined amount throughout the picture layer, thence feeding the blank through a predetermined path, along said path spraying heated fluid on the margin of the film to soften the layer a greater amount along the margin, and then pressing the blank and matrix together face to face to transfer the dye by imbibition from the matrix to the blank.

JOHN F. KIENNINGER.