July 8, 1952 W. E. POHL 2,602,387

APPARATUS FOR SPRAYING CINEMATOGRAPHIC FILM AND A METHOD FOR IMBIBITION PRINTING

Filed March 22, 1949 4 Sheets-Sheet 1

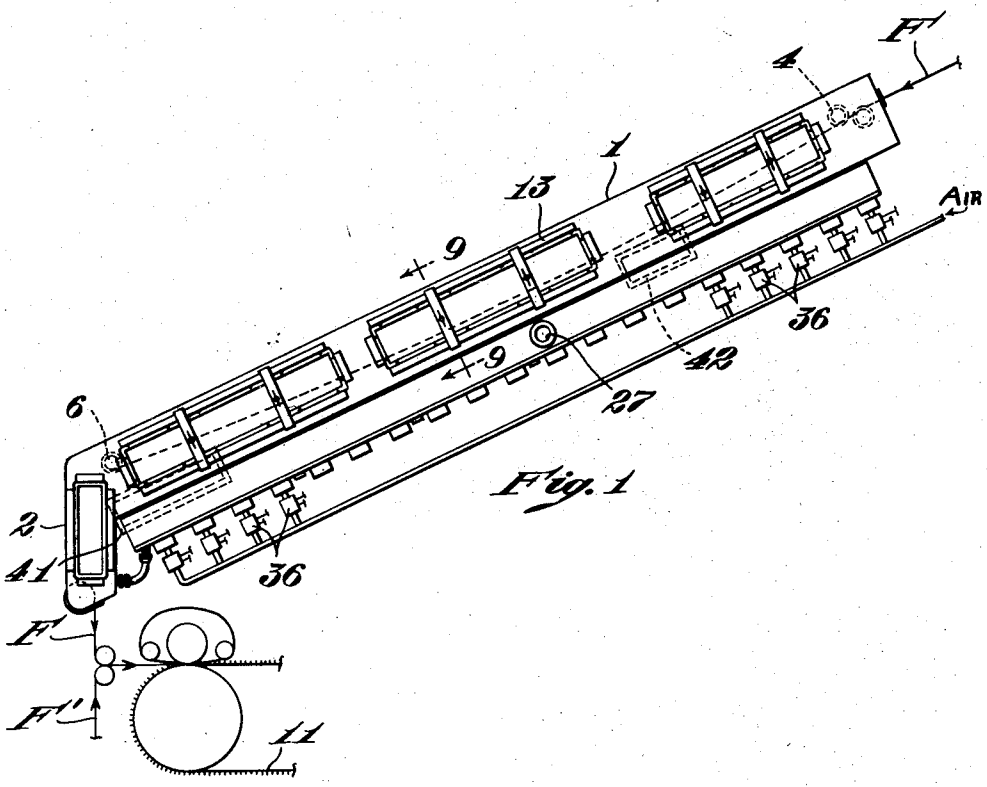

Fig. 1

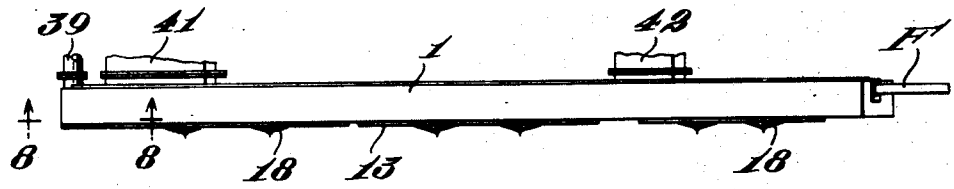

Fig. 2

Inventor
Wadsworth E. Pohl
by Roberts, Cushman & Grover
Att'ys

July 8, 1952 W. E. POHL 2,602,387

APPARATUS FOR SPRAYING CINEMATOGRAPHIC FILM AND A METHOD FOR IMBIBITION PRINTING

Filed March 22, 1949 4 Sheets-Sheet 2

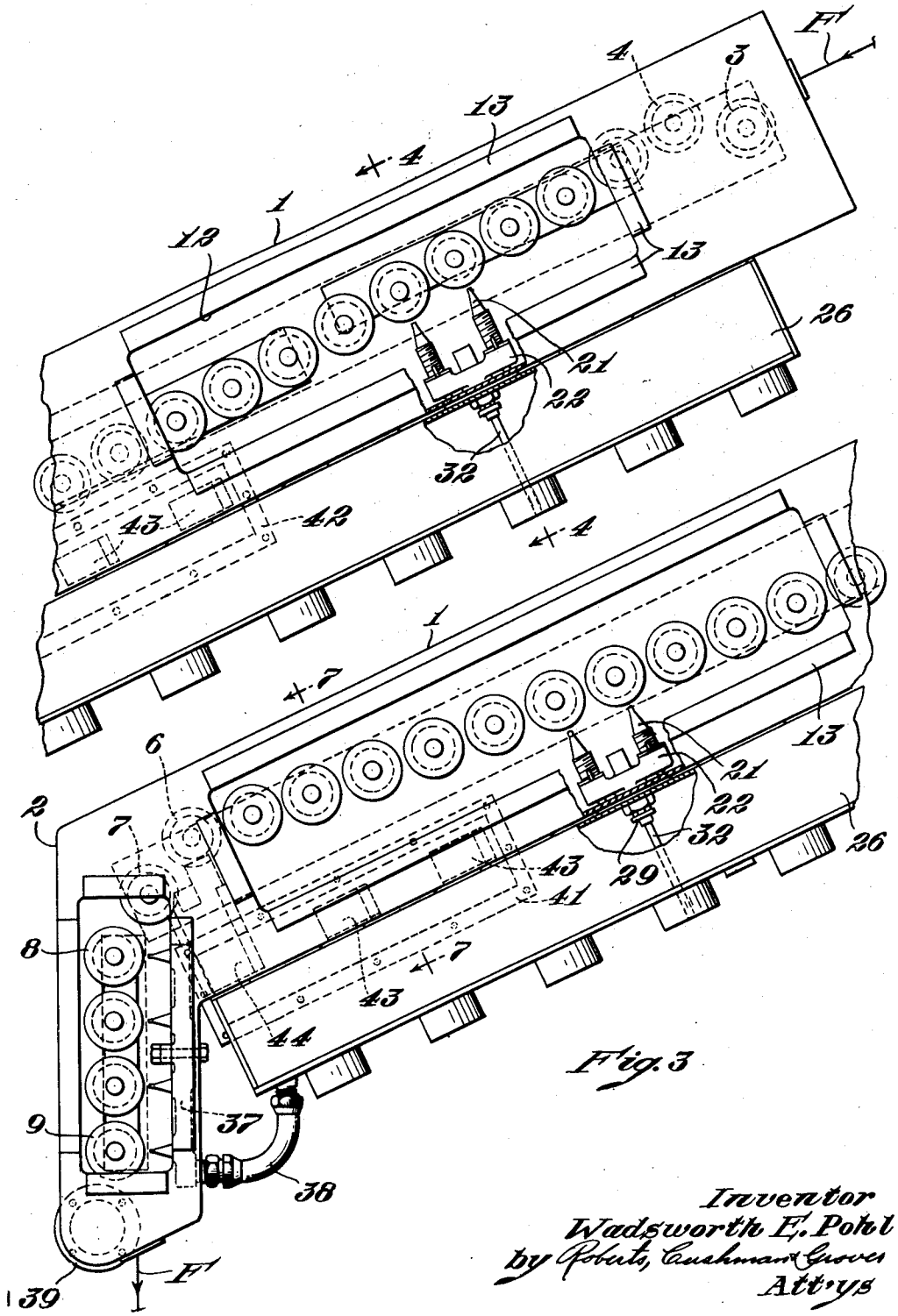

Fig. 3

Inventor
Wadsworth E. Pohl
by Pobats, Cushman & Groves
Att'ys

July 8, 1952 W. E. POHL 2,602,387

APPARATUS FOR SPRAYING CINEMATOGRAPHIC FILM AND A METHOD FOR IMBIBITION PRINTING

Filed March 22, 1949 4 Sheets-Sheet 3

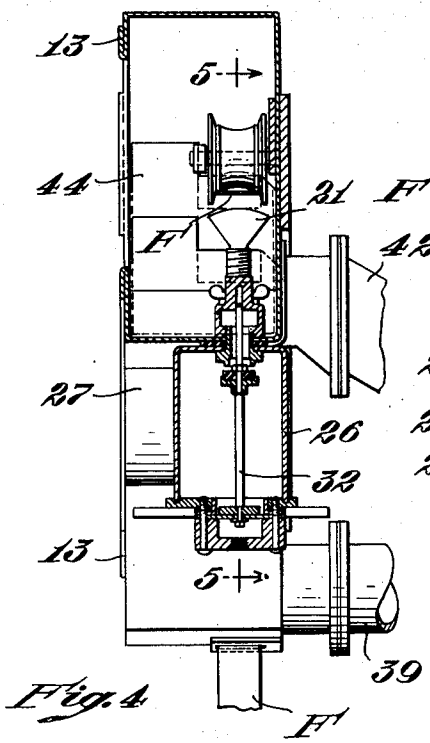

Fig. 4

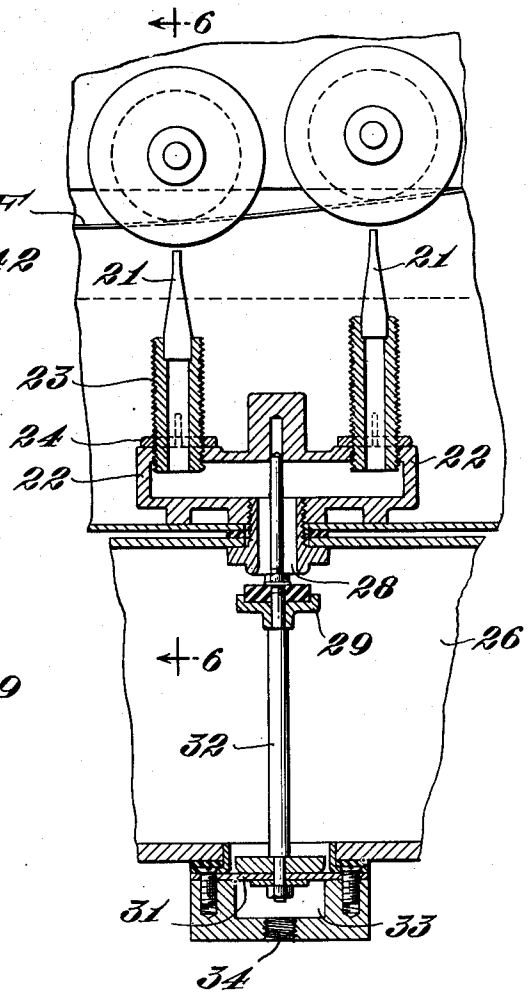

Fig. 5

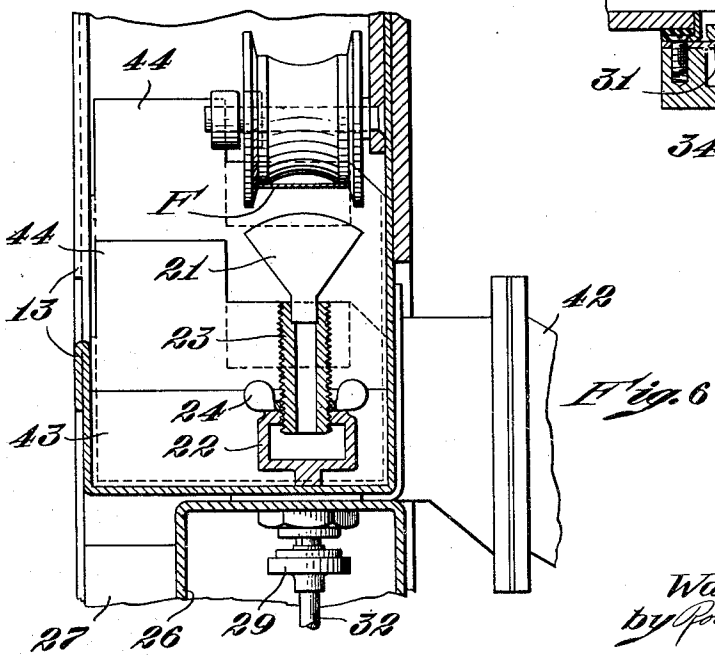

Fig. 6

Inventor
Wadsworth E. Pohl
by Roberts, Cushman & Grover
Att'ys

July 8, 1952 W. E. POHL 2,602,387

APPARATUS FOR SPRAYING CINEMATOGRAPHIC FILM AND A METHOD FOR IMBIBITION PRINTING

Filed March 22, 1949 4 Sheets-Sheet 4

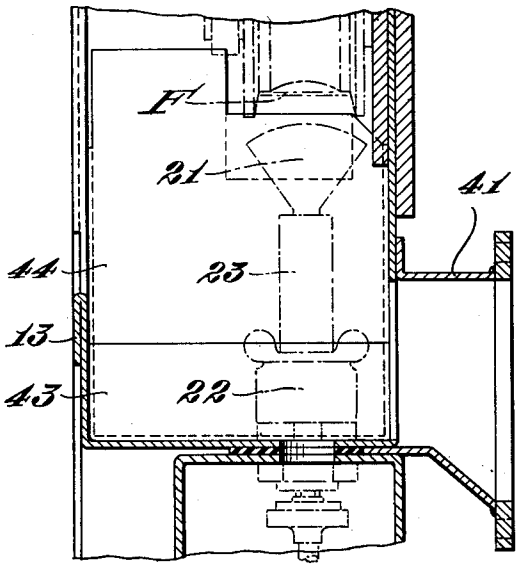

Fig. 7

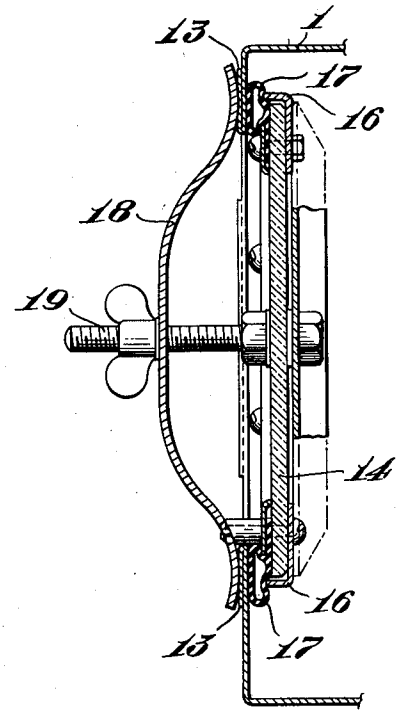

Fig. 9

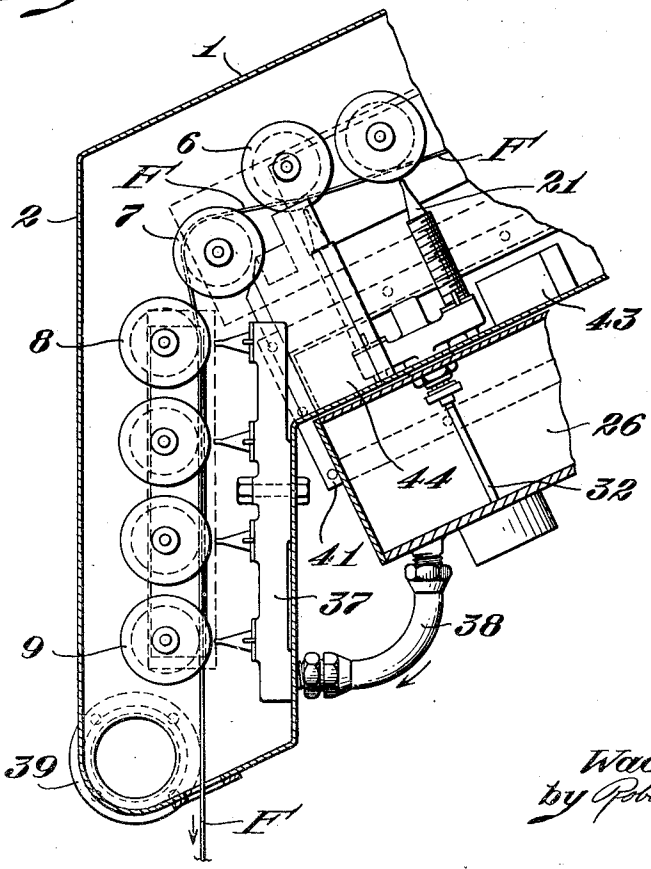

Fig. 8

Inventor
Wadsworth E. Pohl
by Pollock, Cushman & Grover
Att'ys

Patented July 8, 1952 2,602,387

UNITED STATES PATENT OFFICE

2,602,387

APPARATUS FOR SPRAYING CINEMATOGRAPHIC FILM AND A METHOD FOR IMBIBITION PRINTING

Wadsworth E. Pohl, Los Angeles, Calif., assignor to Technicolor Motion Picture Corporation, Hollywood, Calif., a corporation of Maine

Application March 22, 1949, Serial No. 82,865

12 Claims. (Cl. 95—94)

1

In the art of cinematography it is often desirable to subject a film to the action of a liquid for an accurately regulated length of time. For example in printing pictures by imbibition it is customary to soak the printing matrix in dye until it has absorbed an excess of dye and then to wash out an accurately controlled amount of the dye to put the matrix in optimum printing condition. Heretofore it has been proposed to wash matrices by passing them through a tank of water but this has not been satisfactory for various reasons, principally because the method is slow and it is difficult to change the degree of washing in passing from one sequence to another sequence of a long film. It has also been proposed to wash dye from a matrix by spraying the matrix. However the spraying method has not proved successful, at least in the motion picture field, particularly because the degree of washing cannot be controlled accurately and tone rendition is not entirely satisfactory in the resulting imbibition print.

Objects of the present invention are to produce apparatus for spraying film which is simple and economical in construction, which occupies a minimum of space, which can be operated at high speed, which permits quick change between scenes when using comparatively short leaders between the scenes, which affords improved tone rendition, which avoids the formation of spots on the film, which is durable and reliable in operation, which can be easily threaded, which is readily accessible for adjustment and repairs and which is generally superior to prior apparatus of the type referred to.

According to the present invention the apparatus comprises means engaging one side of the film for guiding film along a predetermined path, together with one or more nozzles for spraying the other side of the film. The means for guiding the film preferably comprises a series of rollers distributed along one side of the path and the corresponding side of the film is uncovered except where it contacts the rollers. By locating the nozzles opposite the rollers the film is backed by a roller at the point of impact of each jet. To spray the films uniformly throughout their entire widths the outlets of the nozzles may be arranged to extend transversely of the film path so as to direct thin jets of liquid against the full width of the film. By selectively opening the nozzles to vary the number of jets impinging on the film, the degree of treatment may be varied. In the preferred embodiment the record-carrying side of the film is directed downwardly, the lower

2

side of the film is convex from end to end, and the entrant end of the convex path is substantially higher than the emergent end, so that the film inclines downwardly throughout the entire length of the convex path.

For the purpose of illustration a typical embodiment is shown in the accompanying drawings in which:

Fig. 1 is a front elevation of the apparatus;

Fig. 2 is a top plan;

Fig. 3 is an enlarged side elevation with the doors removed and parts shown in section;

Fig. 4 is a section on line 4—4 of Fig. 3;

Fig. 5 is a section on line 5—5 of Fig. 4;

Fig. 6 is a section on line 6—6 of Fig. 5;

Fig. 7 is a section on line 7—7 of Fig. 3;

Fig. 8 is a section on line 8—8 of Fig. 2; and

Fig. 9 is a section on line 9—9 of Fig. 1.

In the particular embodiment of the invention chosen for the purpose of illustration the apparatus comprises a housing having a downwardly inclined portion 1 terminating at the lower end in a vertical portion 2. Distributed along the length of the elongate housing is a series of guide rollers for the film F, the film feeding into the upper end of the housing through a narrow slit, thence over roller 3, thence under a row of rollers beginning with 4 and ending with 6, thence over roller 7, thence downwardly along the right-hand side of rollers 8 to 9, and thence out of the housing through another narrow slit. As shown in Fig. 1 the rollers 4 to 6 are arranged to define a path which is convex downwardly, the degree of convexity being such that the tension in the film while being pulled through the machine holds it in contact with each of the rollers. After emerging from the housing the film may be fed into contact with another film F′ and thence into an imbibition transfer machine comprising an endless registering pin belt 11 having teeth extending into the sprocket holes of the films to hold them in accurate register while they are traveling through a prolonged path in which dye transfers from the matrix film F to the blank film F′. Such machines are disclosed in Patents 2,271,572, 2,437,361 and 2,448,691.

On its front side the housing 1 is provided with a series of windows 12 to afford access to the interior of the housing, each window having an outturned flange 13 along each side. These windows are normally closed by closures such as shown in Figs. 1, 2 and 9. Each of these closures comprises a transparent plate 14, a rim 16, a peripheral gasket 17, springs 18, and studs 19 for yieldingly holding the closure in place. To remove a clo-

sure the wing nuts (Fig. 9) are loosened to release the clamping action of the springs **18** after which the closure may be lifted through the opening by turning it diagonally of the opening.

Opposite each of the guide rollers **4** to **6** and **8** to **9** is a nozzle **21**, the nozzles being mounted in pairs on hollow fittings **22**. As shown in Figs. 5 and 6 each nozzle is fan-shaped to cover the entire width of the film with a narrow jet of liquid and is adjustably mounted on the fitting **22** by means of a tube **23** and a lock nut **24** so that the distance between the nozzle and the film may be adjusted.

Extending along the bottom of the housing **1** is a supply manifold **26** having an inlet at **27** (Fig. 1). Each of the fittings **22** communicates with this manifold through an opening **28** (Fig. 5) and the inlet of the opening is controlled by valve **29**. This valve is connected to a diaphragm **31** by means of a rod **32**, the diaphragm closing the upper side of a chamber **33** through which air under pressure may be admitted through an opening **34**. As shown in Fig. 1 these air inlets may be controlled by electromagnetic valves **36** which may be controlled manually or automatically in known manner, preferably in the manner the magnets **37** to **42** are controlled in the copending application of Lauriston E. Clark, Ser. No. 74,727, filed February 5, 1949, now Patent Number 2,573,405, issued October 30, 1951. By admitting air to any one of the chambers **33** a pair of nozzles is instantly rendered inoperative.

The nozzles associated with the vertical row of rollers **8** to **9** are supplied through a manifold **37** which is connected to the manifold **26** through a connection **38**. The liquid admitted to the lower portion **2** of the housing runs out through the outlet **39**.

The water impinging on the film in the inclined portion **1** of the housing falls to the bottom of the housing and runs out through outlets **41** and **42**. Extending across the bottom of the housing **1** opposite each of the outlets **41** and **42** are two low baffles **43** and one high baffle **44**, these baffles being inclined transversely of the housing to deflect the downwardly flowing water outwardly through the outlets.

While the details of construction and operation may be varied for different purposes, for washing dye from an imbibition matrix best results have been obtained by spacing the nozzles three to six inches, using water pressure of approximately five pounds per square inch or more and by inclining the housing **1** at an angle about 25° to the horizontal.

With the construction herein disclosed the liquid, after impinging on the film, quickly falls away so as not to impede the washing action. By backing the film with rollers instead of a belt or guideway the upper side of the film is unobstructed except along the line of contact with each roller. This avoids uneven washing of the film which would occur if a belt were used because water would accumulate between the film and belt and leak through and around perforations and over the edges to spot film not yet washed. By applying the jets from the bottom instead of the top the washing is not only facilitated by permitting the water to fall away quickly instead of accumulating on the film but there is no danger of forming spots on the film due to water dripping on the film from the nozzles after the nozzles have been shut off. If the housing **1** were not inclined downwardly liquid would tend to flow by gravity backwardly along the film from the roller **6** toward the lowest central portion of the convex path, thereby interfering with rapid washing and tending to produce defective tone rendition. However by inclining the housing so that the middle portion of the convex path is higher than the lower end of this path there is no tendency for the water to run backwardly along the surface of the film.

It should be understood that the present disclosure is for the purpose of illustration only and that this invention includes all modifications and equivalents which fall within the scope of the appended claims.

I claim:

1. Apparatus for spraying cinematographic film comprising means for guiding the film along a predetermined path with its record carrying side directed downwardly, said means comprising a series of rollers distributed along the upper side of said path and bearing directly on the film, a series of upwardly directed nozzles distributed along the lower side of said path for directing jets against said lower side of the film, said nozzles being opposite said rollers respectively so that the film is backed by a roller opposite each jet, and means for selectively controlling said jets to vary the number of jets impinging on the film.

2. Apparatus for spraying cinematographic film comprising means for guiding the film along a predetermined path with its record-carrying side directed downwardly, said means comprising a series of rollers distributed along the upper side of said path and bearing directly on the film, a series of upwardly directed nozzles distributed along the lower side of said path for directing jets against said lower side of the film, said nozzles being opposite said rollers respectively so that the film is backed by a roller opposite each jet, said nozzles having outlets extending transversely of the film path for directing thin jets against substantially the full width of the film, and means for selectively controlling said jets to vary the number of jets impinging on the film.

3. Apparatus for spraying cinematographic film comprising means for guiding the film along a predetermined path with its record-carrying side directed downwardly and convex from end to end, said means comprising a series of rollers distributed along the upper side of said path in a row having the same curvature and bearing directly on the film, and a series of upwardly directed nozzles beneath said path for directing jets against said lower side of the film, said nozzles being opposite said rollers respectively so that the film is backed by a roller opposite each jet, the entrant end of said convex path being substantially higher than the emergent end so that the film inclines downwardly throughout the entire length of the convex path.

4. Apparatus for spraying cinematographic film comprising means for guiding the film along a predetermined path with its record-carrying side directed downwardly and convex from end to end, said means comprising a series of rollers distributed along the upper side of said path in a row having the same curvature and bearing directly on the film, a series of upwardly directed nozzles distributed along the lower side of said path for spraying said side of the film, said nozzles being opposite said rollers respectively so that the film is backed by a roller opposite each jet, the entrant end of said convex path being substantially higher than the emergent end so that the film inclines downwardly throughout the entire length of the convex path, and means for

selectively controlling said jets to vary the number of jets impinging on the film.

5. Apparatus for spraying cinematographic film comprising means for guiding the film along a predetermined path with its record-carrying side directed downwardly and convex from end to end, said means comprising a series of rollers distributed along the upper side of said path in a row having the same curvature and bearing directly on the film, and a series of upwardly directed nozzles distributed along the lower side of said path for directing jets against said lower side of the film, said nozzles being opposite said rollers respectively so that the film is backed by a roller opposite each jet, said nozzles having outlets extending transversely of the film path for directing thin jets against substantially the full width of the film.

6. The method of printing cinematographic film by dyeing a matrix film, printing a dye-absorptive film by pressing the matrix against the film to cause the dye to be imbibed by the film from the matrix, characterized by feeding the matrix from the dyeing to the printing stages along a predetermined path with its record-carrying side directed downwardly, and at successive locations along said path spraying said side of the matrix with upwardly-directed jets of rinse liquid to remove some of the dye.

7. The method of printing cinematographic film by dyeing a matrix film, printing a dye-absorptive film by pressing the matrix against the film to cause the dye to be imbibed by the film from the matrix, characterized by feeding the matrix from the dyeing to the printing stages along a predetermined path with its record-carrying side directed downwardly, and at successive locations along said path spraying said side of the matrix with upwardly-directed jets of rinse liquid to remove some of the dye, the matrix being inclined downwardly as it passes the jets so that liquid does not flow by gravity along the matrix in the direction opposite to the direction of matrix feed.

8. The method of printing cinematographic film by dyeing a matrix film, printing a dye-absorptive film by pressing the matrix against the film to cause the dye to be imbibed by the film from the matrix, characterized by feeding the matrix from the dyeing to the printing stages along a predetermined path with its record-carrying side directed downwardly and convex, and at successive locations along said path spraying said side of the matrix with upwardly-directed jets of rinse liquid to remove some of the dye.

9. The method of printing cinematographic film by dyeing a matrix film, printing a dye-absorptive film by pressing the matrix against the film to cause the dye to be imbibed by the film from the matrix, characterized by feeding the matrix from the dyeing to the printing stages along a predetermined path with its record-carrying side directed downwardly and convex and at successive locations along said path spraying said side of the matrix with upwardly-directed jets of rinse liquid to remove some of the dye, the matrix being inclined downwardly as it passes the jets so that liquid does not flow by gravity along the matrix in the direction opposite to the direction of matrix feed.

10. The method of printing cinematographic film by dyeing a matrix film, printing a dye-absorptive film by pressing the matrix against the film to cause the dye to be imbibed by the film from the matrix, characterized by feeding the matrix from the dyeing to the printing stages along a predetermined path with its record-carrying side directed downwardly, at successive locations along said path spraying said side of the matrix with upwardly-directed jets of rinse liquid to remove some of the dye, and varying the number of said jets to control the rinsing effect.

11. The method of printing cinematographic film by dyeing a matrix film, printing a dye-absorptive film by pressing the matrix against the film to cause the dye to be imbibed by the film from the matrix, characterized by feeding the matrix from the dyeing to the printing stages along a predetermined path with its record-carrying side directed downwardly, at successive locations along said path spraying said side of the matrix with upwardly-directed jets of rinse liquid to remove some of the dye, the matrix being inclined downwardly as it passes the jets so that liquid does not flow by gravity along the matrix in the direction opposite to the direction of matrix feed, and varying the number of said jets to control the rinsing effect.

12. Apparatus for spraying cinematographic film comprising means for guiding the film along a predetermined path with its record-carrying side directed downwardly and convex from end to end, said means comprising a series of rollers distributed along the upper side of said path in a row having the same curvature and bearing directly on the film, a series of upwardly directed nozzles distributed along the lower side of said path for directing jets against said lower side of the film, said nozzles being opposite said rollers respectively so that the film is backed by a roller opposite each jet, said nozzles having outlets extending transversely of the film path for directing thin jets against substantially the full width of the film, the entrant end of said convex path being substantially higher than the emergent end so that the film inclines downwardly throughout the entire length of the convex path, and means for selectively controlling said jets to vary the number of jets impinging on the film.

WADSWORTH E. POHL.

REFERENCES CITED

The following references are of record in the file of this patent:

UNITED STATES PATENTS

Number	Name	Date
1,008,624	Upp et al.	Nov. 14, 1911
1,351,834	Capstaff	Sept. 7, 1920
1,380,279	Wescott	May 31, 1921
1,991,249	Ingman et al.	Feb. 12, 1935
2,097,059	Ensign	Oct. 26, 1937

FOREIGN PATENTS

Number	Country	Date
687,925	Germany	Feb. 8, 1940
401,421	Italy	Jan. 20, 1943