Jan. 31, 1950 W. E. POHL 2,495,821

CINEMATOGRAPHIC SOUND-TRACK PRINTING

Filed Sept. 29, 1945

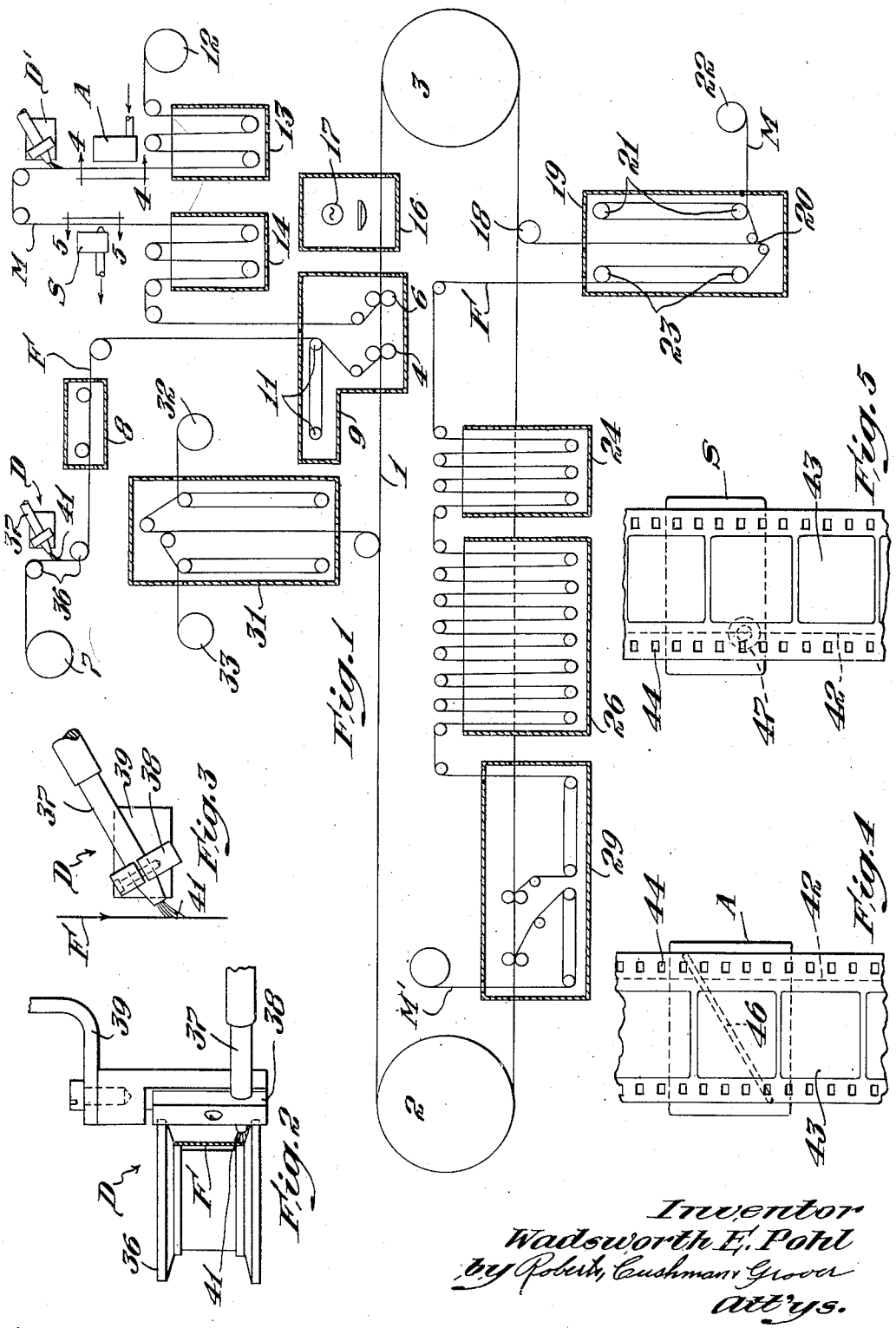


Inventor
Wadsworth E. Pohl
by Roberts, Cushman & Grover
Att'ys.

Patented Jan. 31, 1950 2,495,821

# UNITED STATES PATENT OFFICE

2,495,821

## CINEMATOGRAPHIC SOUND-TRACK PRINTING

Wadsworth E. Pohl, Los Angeles, Calif., assignor to Technicolor Motion Picture Corporation, Hollywood, Calif., a corporation of Maine

Application September 29, 1945, Serial No. 619,315

3 Claims. (Cl. 95—5)

1

In the art of recording sound on film various recording methods have been proposed. The customary way is to sensitize the sound-track zone with silver salts, print the sound-track with light, and then develop the sound-track in silver. It has also been proposed to print the sound-track by imbibition. A silver track has the disadvantage of graininess, resulting in ground-noise. Imbibition tracks have not been satisfactory because the available dyes do not have sufficient absorptivity for light of the spectral ranges to which reproducing photo-cells are sensitive.

In the art of printing both pictures and sound-track from a matrix on a dye-absorptive film, it has been proposed to sensitize the sound-track zone of the dye-absorptive film with ferric iron salts and, while printing the pictures by imbibition, printing the sound-track with light to convert the ferric salts into ferrous salts, developing the film with a soluble iron cyanide developer to form an opaque insoluble iron cyanide, and washing the film to remove the undeveloped iron salts. In this procedure both the picture areas and the sound-track zone of the matrix are dyed with a dye suitable for imbibition printing. In printing the pictures by imbibition the dye in the sound-track zone of the matrix also transfers to the dye-absorptive blank. However the transfer of dye in the sound-track zone is incidental because the specially sensitized sound-track zone of the blank is printed with light modulated by the dye in the sound-track zone, before the sound-track dye has transferred, after it has transferred or while it is partly in the matrix and partly in the blank.

While this method of printing pictures by imbibition and the sound-track by light on a specially sensitized zone of the dye-absorptive blank has many advantages over other printing methods, it has one disadvantage. While the films are held together for imbibition printing a trace of the ferric iron salts migrates from the blank to the matrix and, after repeated printings with the same matrix, the migratory salts harden the sound-track zone of the matrix, progressively rendering this zone less dye-absorptive. Thus after repeated printings the sound-track zone of the matrix absorbs too little dye to print a first-class sound-track.

Objects of the present invention are to produce a sound-track which is free from the aforesaid disadvantages, which is substantially free from graininess, which has adequate absorptivity for light to which photo-cells are sensitive, which can be produced in an ordinary imbibition process with facility and without adding substantially either to the cost of the process or the time of carrying out the process, which is uniform throughout successive printings with the same matrix, which requires less dye and which is generally superior to sound-tracks as heretofore produced.

2

In the preferred application of the present invention the sound-track is formed in a water absorptive film by sensitizing the sound-track zone with ferric iron salts, printing the sound-track with light to convert the ferric salts into ferrous salts, developing the film with a soluble iron cyanide developer to form an opaque insoluble iron cyanide, and washing the film to remove the undeveloped iron salts. While the entire film may be thus sensitized the ferric salts are preferably confined to the sound-track zone to avoid any danger of contaminating the picture areas. By using a ferricyanide developer the converted ferrous salts are developed, whereas by using a ferrocyanide the unconverted ferric salts are developed. Thus when using a ferricyanide developer the sound-track should be printed from a negative and when using a ferrocyanide developer the sound-track should be printed from a positive. The ferricyanide developer may be incorporated in the film along with the light-sensitive ferric salts or it may be applied after exposure as is customary with developers. When the ferricyanide is incorporated in the film, development begins as soon as the exposed film is wetted. However the ferrocyanide developer can only be applied after exposure; if incorporated in the film before exposure it would immediately react with the ferric salts uniformly throughout the entire width of the sound-track zone.

While various iron cyanides may be used as developers sodium or potassium ferricyanide is preferable, and the most satisfactory sensitizing solution thus far obtained is the following:

| | | |
|---|---|---|
| Ferric ammonium oxalate (pearls) | grams | 27 |
| Ferric oxalate (pearls) | do | 4.5 |
| Sodium dichromate | do | 0.5 |
| Hydrochloric acid, C. P. | mls | 10 |
| Di-potassium sodium ferricyanide ($K_2NaFe(CN)_6$) | grams | 10 |
| Water | mls | 55 |

For ferrocyanide development the sensitizing solution may comprise:

| | | |
|---|---|---|
| Ferric ammonium oxalate (pearls) | grams | 27 |
| Ferric oxalate (pearls) | do | 4.5 |
| Hydrochloric acid, C. P. | mls | 10 |
| Water | mls | 55 |

For developing a film sensitized in this way the bath may comprise:

| | | |
|---|---|---|
| Potassium ferrocyanide | grams | 10 |
| Water | mls | 100 |

The invention involves a method of printing pictures by imbibition, from a dyed matrix having both pictures and a sound-track, on a water ab-

sorptive film having its sound track zone sensitized with ferric iron salts, the method comprising continuously conducting the film and matrix along predetermined paths with the film and matrix in face-to-face contact along a common portion of the paths to permit dye to be imbibed by the film from the matrix and, in the aforesaid common portion, printing the sound-track in the aforesaid film with light passing through the matrix to convert the ferric salts into ferrous salts and, farther along the path of the film, developing the film with a soluble iron cyanide developer to produce a sound-track in the form of a light-absorptive, insoluble iron cyanide, and finally washing the film to remove the unexposed iron salts. While the sound-track of the matrix may be in any suitable form, it is preferably in the form of a dyed relief like the pictures, in which case both pictures and sound-track may be dyed in the same operation in advance of the location where the sound-track is printed as aforesaid. In imbibition printing it is particularly advantageous to incorporate a ferricyanide developer in the film, along with the ferric iron salts, because the imbibition process normally involves the use of a water bath and thus the sound-track may be developed while the film is traveling through this water bath without the necessity of adding a separate developing step.

According to the present invention the matrix, after it is dyed and before it reaches the blank film, is treated in its sound-track zone to prevent dye transfer from matrix to blank in that zone, whereby the sound-track zone of the matrix need be dyed only once and the dye in this zone need not be replenished for successive printings. Not only does this require less dye but it avoids the aforesaid difficulty resulting from the migration of the iron salts from the blank to the matrix. Inasmuch as the sound-track zone of the matrix need not be re-dyed after the first printing, the aforesaid hardening of the sound-track zone of the matrix by the iron salts from the blank is immaterial. While there are various ways of preventing the dye in the sound-track zone of the matrix from transferring to the blank film while the dye in the picture areas is being transferred, preferably the dye in the sound-track zone is mordanted by application of a suitable mordant in the sound-track zone. When printing pictures with an acid dye, as is customary in imbibition printing, the mordant preferably comprises a basic dye. Suitable acid dyes are metanil yellow (C. I. 138) and chrysophenine G (C. I. 365) and suitable basic dyes are chrysoidine G (C. I. 20) and methylene green B (C. I. 924).

In another aspect the present invention involves a novel matrix which contains in its picture areas dye which is free to transfer to the blank film in imbibition printing and also containing in its sound-track zone dye which is mordanted so as not to transfer when the pictures are printed. In still another aspect the invention involves a printed film having imbibition pictures which comprise acid dye and a sound-track in the form of a light-absorptive, insoluble, iron cyanide, the sound-track zone being substantially free from the aforesaid acid dye.

For the purpose of illustration typical apparatus for practicing the invention are shown in the accompanying drawings in which

Fig. 1 is a diagrammatic view of one embodiment;

Fig. 2 is a plan view of a suitable device for applying the sensitizing solution to the sound-track zone of the blank and the mordanting solution to the sound-track zone of the matrix;

Fig. 3 is a side elevation of the device; and

Figs. 4 and 5 are views on lines 4—4 and 5—5 respectively of Fig. 1.



The apparatus shown in Fig. 1 comprises an endless pinbelt 1 traveling in an orbital path over drums 2 and 3, the belt having teeth adapted to fit into the sprocket holes of films. Thus when two films are applied to the belt in superposed relationship they are held in fixed position in relation to each other and to the belt while traveling with the belt along the aforesaid orbital path. As shown in Fig. 1 the film F to be printed is fed to the belt between two pressure rollers 4 which seat the film on the belt, and the matrix M is fed to the belt between pressure rollers 6 which seat the matrix on the film F. The film F is fed from a supply roll 7 past a device D for applying the sensitizing solution to the sound-track zone of the film, thence through a dryer 8 for drying the film and thence into a tank 9 filled with water. By drying the film before entering tank 9 successive films leave tank 9 with the same degree of moisture; if the film were not so dried successive films would enter tank 9 with different degrees of moisture and therefore leave the tank with different degrees of moisture. After entering the tank 9 the film may loop back and forth over a series of rollers 11 to permit the gelatin coating to soak up a predetermined amount of moisture before contacting the matrix M. Matrix M is fed from a supply roll 12 through a dye tank 13, thence past an air-jet device A for blowing off the superficial dye, thence past a device D′ for applying the aforesaid mordant to the sound-track zone, thence past a suction device S for removing any excess of mordant which has not been absorbed by the sound-track zone, thence through a water tank 14 to wash the surface of the matrix and thence through the water tank 9 to the seating rolls 6. By bringing the matrix M and the film F in contact under water the danger of trapping air bubbles between the two films is avoided. The belt 1 enters and leaves the tank 9 through slots provided with water traps to minimize the leakage of water through the slots.

After being seated in superposition on the belt the two films pass through an exposure box 16 containing a light source 17 for exposing the sound-track zone of the film F through the dyed sound-track of the matrix M. After traveling together long enough for the dye in the picture areas to transfer from the matrix M to the film F the two films are fed from the belt over a roller 18 into a dry box 19 where the two films are stripped apart at 20, the matrix M looping back and forth over rolls 21 to dry the matrix and then feeding to a take-up roll 22 and the film F looping back and forth over a series of rolls 23 to dry the film and then feeding through tanks 24 and 26. Tank 24 contains the soluble iron cyanide developer for developing the sound-track and tank 26 contains water for washing away the unexposed iron salts.

When the pictures on the film F are printed with a single color, such as black, the film F may be dried after leaving tank 26. However in color printing one or more additional colors may be printed on the film F after it leaves the tank 26. In a three-color process involving yellow, magenta and cyan, the first color with which the sound-track is printed, is preferably yellow. In Fig. 1

the film F is fed into another tank 29 corresponding to tank 9 where it is again seated on the belt 1, and a second matrix M', after being dyed with the second color in a manner similar to that already described in connection with the matrix M, is fed to the belt in superposition with the film F. After the last color has been printed the two films are fed from the belt, peeled apart, dried and wound in separate rolls. Thus in a two-color process, such as illustrated in Fig. 1, the films are stripped apart and dried in a cabinet 31 and then separately wound in rolls 32 and 33. Of course the film must be protected from light strong enough to cause a fogging exposure, at least until the unexposed iron salts have been washed out.

The device D, which applies the sensitizing solution to the sound-track zone of the film, comprises a pair of rollers 36, a tube 37 leading from a suitable container, a head 38 mounted on a bracket 39 for supporting the tube 37 and a camel's hair brush 41 mounted in the lower end of the tube 37 for applying a stripe of the solution to the sound-track zone of the film. As shown in Figs. 4 and 5 the sound-track zone 42 is located between the picture spaces 43 and one of the rows of sprocket holes 44. The device D' for applying the mordant may be similar to the device D. The blow-off device A has an oblique slot 46 (Fig. 4) through which a sheet of air is emitted under pressure, the sheet being inclined somewhat downwardly so as to roll back the dye which adheres to the surface of the film. The suction device S has a tubular inlet 47 which projects into juxtaposition to the path of the sound-track zone of the matrix and through which is drawn any mordant which has not been absorbed by the sound-track zone while the matrix travels from the mordant applicator D' to the suction device.

As indicated above the ferricyanide may also be incorporated in the sound-track zone on the film F before the sound-track zone is exposed, and both the ferric salts and the ferricyanide may be incorporated in the sound-track zone before the film is fed into the imbibition apparatus, in which case the tanks 24 and 26 may be omitted. In this case there is no reaction between the iron salts and ferricyanide in tank 9 because the ferric salts have not yet been converted into ferrous salts. When the sound-track zone is exposed in the box 16 the reaction begins because the sound-track zone has already absorbed some moisture in the tank 9. When the film F reaches tank 29 the reaction is completed and the film is washed. Instead of eliminating both tanks 24 and 26, tank 26 may be retained to develop the sound-track and thoroughly wash the film, so that the water in tank 29 is not contaminated by the iron salts, the ferricyanide or the reaction products of the two.

It should be understood that the present disclosure is for the purpose of illustration only and that this invention includes all modifications and equivalents which fall within the scope of the appended claims.

I claim:

1. In the art of printing pictures by imbibition, from a dyed matrix having both pictures an a sound-track, on a water absorptive film having soluble light-sensitive ferric salts in its sound-track zone, the method which comprises dyeing the matrix with an acid dye, continuously feeding the film and matrix into face-to-face contact and thence conducting the film and matrix along



predetermined paths with the film and matrix in face-to-face contact along a common portion of the paths to permit dye to be imbibed by the film from the matrix, in said common portion printing the sound-track in said zone with light passing through the matrix to convert the ferric salts into ferrous salts, and farther along the path of the film developing the sound-track with soluble iron cyanide developer selected from the class consisting of ferricyanide and ferrocyanide salts to produce a sound-track in the form of a light-absorptive, insoluble, iron cyanide, washing the film to remove the unexposed iron salts, and after the matrix is dyed and before it reaches the film mordanting the sound-track zone of the matrix with a basic dye to prevent dye transfer from matrix to film in said zone, whereby the migration of ferric salts from the film to the matrix does not affect the quantity of dye in the sound-track zone of the matrix throughout successive printings.

2. In the art of printing pictures by imbibition, from a dyed matrix having both pictures and a sound-track, on a water absorptive film having soluble light-sensitive ferric salts in its sound-track zone, the method which comprises dyeing the matrix with an acid dye, continuously feeding the film and matrix into face-to-face contact and thence conducting the film and matrix along predetermined paths with the film and matrix in face-to-face contact along a common portion of the paths to permit dye to be imbibed by the film from the matrix, in said common portion printing the sound-track in said zone with light passing through the matrix to convert the ferric salts into ferrous salts, and farther along the path of the film developing the ferrous salts with ferricyanide to produce a sound-track in the form of a light-absorptive, insoluble, iron cyanide, washing the film to remove the unexposed iron salts, and after the matrix is dyed and before it reaches the film mordanting the sound-track zone of the matrix with a basic dye to prevent dye transfer from matrix to film in said zone, whereby the migration of ferric salts from the film to the matrix does not affect the quantity of dye in the sound-track zone of the matrix throughout successive printings.

3. In the art of printing pictures by imbibition, from a dyed matrix having both pictures and a sound-track on a water absorptive film having in its sound-track zone soluble light-sensitive ferric salts and ferricyanide, the method which comprises dyeing the matrix with an acid dye, continuously feeding the film and matrix into face-to-face contact and thence conducting the film and matrix along predetermined paths with the film and matrix in face-to-face contact along a common portion of the paths to permit dye to be imbibed by the film from the matrix, in said common portion printing the sound-track in said zone with light passing through the matrix to convert the ferric salts into ferrous salts, and farther along the path of the film passing the film through a water bath to cause said ferricyanide to develop the sound-track in the form of a light-absorptive, insoluble, iron cyanide, washing the film to remove the unexposed iron salts, and after the matrix is dyed and before it reaches the film mordanting the sound-track zone of the matrix with a basic dye to prevent dye transfer from matrix to film in said zone, whereby the migration of ferric salts from the film to the matrix does not affect the quantity of dye in the sound-

track zone of the matrix throughout successive printings.

WADSWORTH E. POHL.

## REFERENCES CITED

The following references are of record in the file of this patent:


UNITED STATES PATENTS

| Number | Name | Date |
|---|---|---|
| 1,408,314 | Thornton | Feb. 28, 1922 |
| 1,562,828 | Hernandez-Mejia | Nov. 24, 1925 |
| 1,807,805 | Tuttle | June 2, 1931 |
| 1,900,140 | Tuttle | Mar. 7, 1933 |
| 1,973,463 | Capstaff | Sept. 11, 1934 |
| 2,009,689 | Crespinel | July 30, 1935 |
| 2,025,658 | Gaspar | Dec. 24, 1935 |
| 2,040,575 | Thornton | May 12, 1936 |
| 2,062,304 | Gaspar | Dec. 1, 1936 |
| 2,164,828 | Lierg | July 4, 1939 |
| 2,207,916 | Eggert | July 16, 1940 |
| 2,341,406 | Weyerts | Feb. 8, 1944 |
| 2,382,670 | Seymour | Aug. 14, 1945 |

FOREIGN PATENTS

| Number | Country | Date |
|---|---|---|
| 379,558 | Great Britain | Sept. 1, 1932 |
| 525,549 | Great Britain | Aug. 30, 1940 |