Dec. 4, 1951 J. F. KIENNINGER 2,577,332

IMBIBITION PRINTING

Filed Sept. 27, 1945

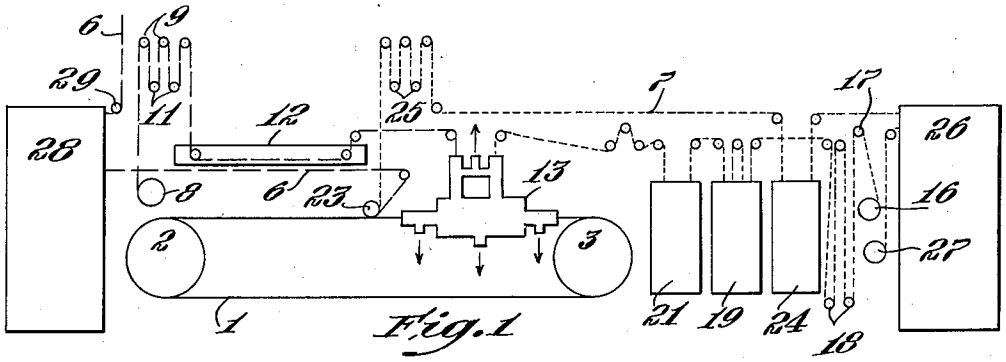

Fig. 1

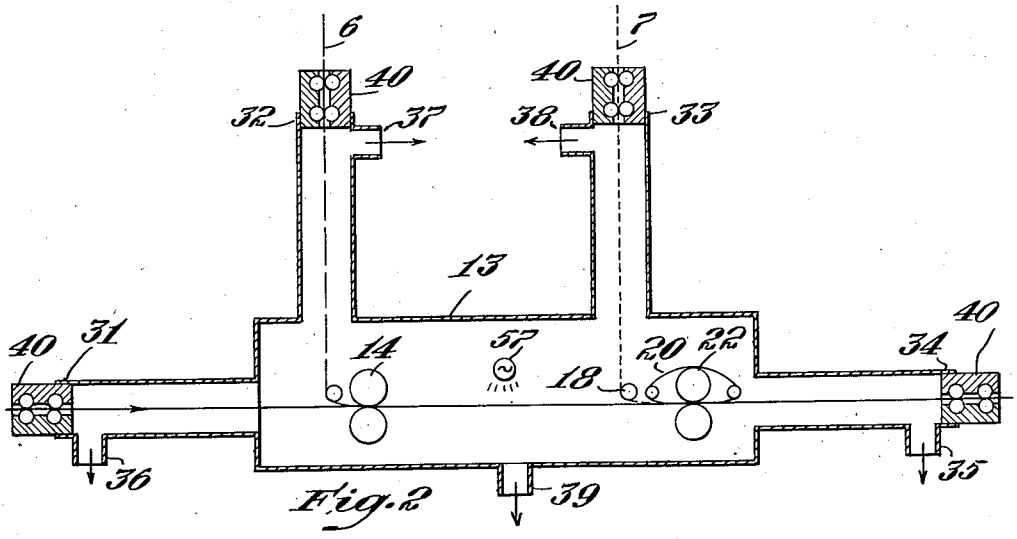

Fig. 2

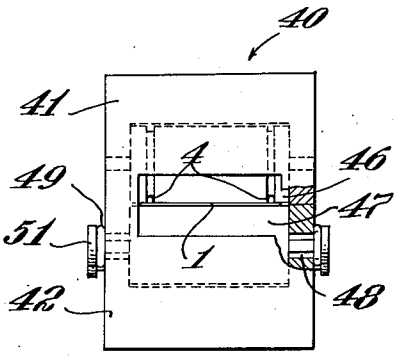

Fig. 3

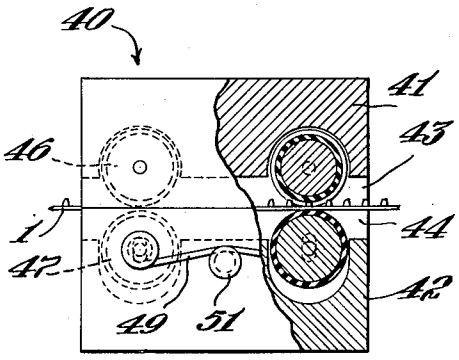

Fig. 4

Inventor
John F. Kienninger
by Robert, Cushman & Grover
Att'ys.

Patented Dec. 4, 1951 2,577,332

UNITED STATES PATENT OFFICE

2,577,332

IMBIBITION PRINTING

John F. Kienninger, Los Angeles, Calif., assignor to Technicolor Motion Picture Corporation, Hollywood, Calif., a corporation of Maine

Application September 27, 1945, Serial No. 618,830

6 Claims. (Cl. 101—149.1)

1

In printing motion pictures by imbibition, from a dye impregnated matrix to a dye-absorptive blank, it is customary to employ a relief matrix in which the gelatine coating is thicker in the shadows than in the highlights and to use a blank comprising a layer of gelatine or other dye-absorptive material. In order to obtain good definition in the picture printed on the blank it is necessary to employ relatively hard gelatine and in order to maintain intimate contact between the films while the dye is being imbibed by the blank from the matrix, it is desirable to soften the gelatine on the blank temporarily. This is usually accomplished by passing the blank through a water bath in transit to the matrix in order to cause the gelatine on the blank to swell somewhat before it comes into contact with the dye-wet matrix. If the gelatine be softened too much it mitigates against good definition in the transfer operation, and if the gelatine be softened too little the films do not adhere in sufficiently close contact to afford good transfer of dye. Particularly at the edges the films tend to separate from each other, resulting in so-called edge trouble. The degree of softening for optimum definition is somewhat above the point where the films may be maintained in intimate contact with each other throughout their entire width. Heretofore it has been necessary to tolerate imperfect definition to maintain the films in intimate contact, and as a practical matter it has been customary to compromise between the two evils.

The aforesaid edge trouble results from the fact that the valleys of the relief matrix do not make good contact with the blank along the edges of the pictures during the transfer process, as they would if the bank were swollen with water to a greater degree. This lack of intimate contact interferes with the transfer of dye, resulting in imperfect printing along the margins of the pictures. Ordinarily this edge trouble is confined to a narrow zone just inside the sprocket holes. In the case of film having a sound-track inside one row of sprocket holes the edge trouble is usually confined to the edges of the pictures along the other row of sprocket holes; on the sound-track side the edges of the pictures are too remote from the sprocket holes to be subject to the trouble.

Objects of the present invention are to avoid the aforesaid difficulties and to maintain intimate contact between the two films throughout their entire width, to counteract the tendency for the films to separate at the edges, to permit the dye-absorptive layer of the blank film to be

2

hardened to the optimum degree for good definition, to make it unnecessary to soften this layer excessively in order to make the two films adhere in intimate contact during the transfer process, to reduce lateral diffusion of dye in the blank, to improve the definition of the printed picture, to afford more rapid adhesion between matrix and blank, to reduce the length of time the two films must be held in registry before they adhere in fixed relationship to each other without the aid of registering means, to reduce the danger of faulty dye transfer due to air bubbles entrapped between the two films when they are brought together, and generally to improve the art of joining two films in superposition for any purpose.

In one aspect the present invention involves feeding two films through a vacuum chamber and rolling them into intimate contact with each other while in the chamber. By wetting one or both films to render their faces tacky they adhere together, and after they emerge from the vacuum chamber the atmospheric pressure holds them in intimate contact. Best results are obtained by removing the superficial liquid adhering to the faces of the films before they enter the vacuum chamber, the preferred means for removing the superficial liquid comprising air jets. When the films are brought together in the vacuum chamber they must be accurately registered with each other and this is preferably accomplished by means of an endless belt or sprocket wheel or other endless carrier traveling in an orbital path with register teeth fitting in the sprocket holes of the films. When using a belt only a part of the orbital path should be disposed in the vacuum chamber, the belt entering and leaving the chamber through air traps. Likewise the films are preferably fed to the belt from the outside of the vacuum chamber through suitable air traps. When the films are rolled together on a belt one film may be seated on the belt before the belt enters the vacuum chamber, the second film being rolled against the first film inside the chamber, but preferably both films are fed to the belt inside the chamber.

For the purpose of illustration a typical embodiment of the invention is shown in the accompanying drawings in which

Fig. 1 is a diagram of an imbibition machine;

Fig. 2 is an enlarged view showing the aforesaid vacuum chamber in section;

Fig. 3 is an end view of one of the air seals used at the entrances and exits of the vacuum chamber, a part being broken away; and

Fig. 4 is a side view of one of the air seals with parts broken away.

The particular embodiment chosen for the purpose of illustration comprises a pin belt 1 trained over sheaves 2 and 3, the belt having marginal rows of teeth or pins 4 adapted to fit into the sprocket holes of the blank and matrix films 6 and 7 while the two films travel in superposition on the belt. The blank 6 feeds from a supply roll 8 through an elevator comprising upper rolls 9 rotating about fixed axes and lower rolls 11 which are supported by the film loops and which move up and down to accommodate variations in the degree of film shrinkage and differences in the rate of drive of the belt 1 and the driven sprocket wheels. From the elevator the blank passes through a pre-wet tank 12 and thence to a roll tank 13 where the blank is seated on the belt by means of a roller 14.

The matrix 7 feeds from a supply reel 16 over a driven sprocket wheel 17 thence through an elevator comprising lower floating rolls 18, thence through a dye tank 19, thence through a wash tank 21 where the superficial dye is washed off, thence over a series of rollers to provide a safety loop and thence under roll 22 where the matrix is seated on the belt in face-to-face contact with the blank 6. To seat the two films more firmly together an endless belt 20 may be trained around the roll 22 and two auxiliary guide rolls, the endless belt 20 having sprocket holes to receive the teeth of belt 1. The seating rolls 14 and 22 and the seating belt are disclosed in detail in Patent 1,707,710, granted April 2, 1929 and application Ser. No. 522,711, filed February 17, 1944, now Patent No. 2,437,361, issued March 9, 1948. From the roll tank 13 the two films travel together until they reach the roll 23, during which time the pictures are printed on the blank by imbibition of dye by the blank from the matrix. After leaving the pin belt at roller 23 matrix 7 travels over a series of rolls including floating elevator rolls 25, thence to matrix rinse tank 24, thence to the dry box 26 and thence to the take-up reel 27.

After leaving the pin belt at roller 23 the blank 6 passes to the dry box 28 and thence over roll 29 to a take-up reel or to another similar set of apparatus where another color aspect is printed on the blank in superposition to the first, as described for example in copending application of Frank W. Taylor, Serial No. 599,593, filed June 15, 1945, now Patent No. 2,448,691, issued Sept. 7, 1948. Certain of the film rollers may be sprocket wheels and these wheels and the pin belt may be driven in various ways, as for example the way disclosed in the aforesaid copending application.

According to the present invention all of the entrances and exits of the roll tank 13 are sealed and the tank is evacuated. In the illustration there are three entrances 31, 32 and 33 where the belt 1, the blank 6 and the matrix 7 enter the chamber, and one exit 34 where all three leave the chamber. These entrances and exits are preferably located at the ends of narrow extensions of the chamber and the chamber is evacuated through outlets 35, 36, 37 and 38 located near the outer ends of the extensions and an outlet 39 in the chamber itself.

The preferred means for sealing each of the aforesaid entrances and exits comprises a block 40 divided into two parts 41 and 42, which are secured tightly together and which are tightly fitted into the extensions of the chamber 13. The two parts of each seal may be secured together and to the chamber in any suitable way as by welding. Recesses 43 and 44 are provided in the opposed faces of the parts 41 and 42 to form a passageway for the belt and films, the width of the passageway being approximately equal to the width of the belt and films. Mounted in circular recesses in the opposed faces of the passageway are rollers 46 and 47 which bear on opposite sides of the film or belt. The circular recesses have a radius approximately equal to that of the rollers so that the rollers substantially touch opposite sides of the recesses, thereby preventing substantial entrance of air around the peripheries of the rollers. The rollers 46 in the block 41 are supported in fixed journals whereas the rollers 47 in the block 42 have stud shafts extending out through slots 48 in the sides of the block 42 where they are journaled in the bent ends of springs 49 which are bent around studs 51 on the outside of block 42. Thus the rollers 47 are floating and are spring-pressed toward the rollers 46. All of the rollers are covered with relatively soft rubber so that they conform to the contour of the belt and films. They may be soft enough to squeeze over the edges of the belt and films to seal the spaces, if any, between the edges of the belt and film and the sides of the passageway through the block 40. The rolls 46 on the pin side of the belt where the belt enters and leaves the chamber 13, as well as the rolls 14 and 22, have annular grooves to accommodate the teeth on the belt 1. In the case of rolls 46 the soft rubber covering is thick enough to squeeze in between the teeth and present substantial ingress of air.

By bringing the films together in a vacuum and pressing the films intimately together inside the vacuum chamber, the films are held tightly together by the air pressure on their outer faces after they leave the chamber. Consequently they may be fed away from the belt shortly after leaving the vacuum chamber, thereby permitting the use of a much shorter pin belt than would otherwise be necessary. To make the films cling even tighter together the blank film 6 may be warmed by radiant energy to make its gelatine coating somewhat softer. For this purpose a heater 57 is illustrated in Fig. 2.

It should be understood that the present disclosure is for the purpose of illustration only and that this invention includes all modifications and equivalents which fall within the scope of the appended claims.

I claim:

1. In imbibition printing cinematographic film by transferring dye from one film to another, the method which comprises feeding the two films into contact with each other in a zone of reduced pressure while one of the films is wet, and rolling them into intimate contact with each other while in said zone the films being fed together at an oblique angle defining a tapered crotch between the two films.

2. In imbibition printing cinematographic film by transferring dye from one film to another, the method which comprises wetting one film to render one face tacky, removing the superficial liquid, feeding the two films into contact with each other in a zone of reduced pressure, and while in said zone rolling them into intimate contact with said face engaging one face of the other film, the films being fed together at an oblique angle defining a tapered crotch between the two films.

3. In imbibition printing cinematographic film by transferring dye from one film to another, the method which comprises feeding the two films

into contact with each other in a zone of reduced pressure while one of the films is wet, rolling them into intimate contact with each other while in said zone, and holding the films in registry with teeth fitting in their sprocket holes, the films being fed together at an oblique angle defining a tapered crotch between the two films.

4. In imbibition printing cinematographic film by transferring dye from one film to another, the method which comprises wetting one film to render one face tacky, removing the superficial liquid, feeding the two films into contact with each other in a zone of reduced pressure, while in said zone rolling them into intimate contact with said face engaging one face of the other film, and holding the films in registry with teeth fitting in their sprocket holes, the films being fed together at an oblique angle defining a tapered crotch between the two films.

5. Imbibition printing apparatus for transferring dye from one cinematographic film to another comprising a vacuum chamber forming a zone of reduced pressure having a plurality of film openings to permit films to pass into the chamber and thence out of the chamber, and a port through which the chamber may be evacuated, air traps for said openings, means for wetting one film to render one face tacky, means for feeding the films to and from the chamber through said openings, a pair of rollers in the chamber for rolling the films together with said face in intimate contact with the other film, and guides for guiding the films to said rollers at an acute angle defining between the two films a tapered crotch through which adherent air bubbles are squeezed out.

6. Imbibition printing apparatus for transferring dye from one cinematographic film to another comprising a vacuum chamber forming a zone of reduced pressure having a plurality of film openings to permit films to pass into the chamber and thence out of the chamber and a port through which the chamber may be evacuated, air traps for said openings, means for wetting one film to render one face tacky, an endless carrier traveling in an orbital path at least a portion of which is disposed in said chamber, the carrier having register teeth fitting in the sprocket holes of the films, means for feeding said films into the chamber through two of said openings respectively, means in the chamber for rolling the films into intimate contact with each other and applying them to said belt with the register teeth projecting through the sprocket holes of the films, guides for guiding the films to said rollers at an acute angle defining between the two films a tapered crotch through which adherent air bubbles are squeezed out, and means for feeding the films from the chamber.

JOHN F. KIENNINGER.

REFERENCES CITED

The following references are of record in the file of this patent:

UNITED STATES PATENTS

Number	Name	Date
1,675,743	Young	July 3, 1928
1,707,695	Troland	Apr. 2, 1929
2,397,827	Williams	Apr. 2, 1946